Electrolux PROFESSIONAL

Simplicity Bubblers Chilled Beverage Dispensers 2x9 L, agitator model with locking lid

ITEM #

MODEL #

NAME #

SIS #

AIA #

CCCRKT (ECS2E22)	Chilled Beverage Dispenser with 2x9 liter bowls with agitator and locking lid, R290

Short Form Specification

Item No.

Chilled beverage dispenser, 2x9lt, with agitation function for fresh juices, coffees, or teas with minimal foaming system. Dispense 2 flavors in 9lt easy-clean bowls with 23cm cup clearance. Easy-off bowl release system for faster and easier assembly and disassembly. Bowls with locking lid for added safety against tampering.
Temperature range from 1.7 - 5° C. Pre-mix dispenser with stainless steel base and clear plastic bowls. Compact size of 27 cm.

APPROVAL:

Main Features

- Agitation function for fresh juices, coffees, or teas with minimal foaming system.
- Dispense 2 flavors in 9 L easy-clean bowls with 23 cm cup clearance.
- Easy-off bowl release system for faster and easier assembly and disassembly.
- User friendly design enables machine to dispense product till the very last drop.

Construction

- Compact size of 27 cm wide saves valuable counter space.
- Temperature range from 1.7 - 5° C.
- Refrigerant type: R290.
- Pre-mix dispenser with stainless steel base and clear plastic bowls.
- Fewer removable parts to simplify cleaning and reduce maintenance.
- The air intakes from the bottom and exhaust to back.
- Locking lid for added safety against tampering.

Simplicity Bubblers
Chilled Beverage Dispensers 2x9 L, agitator model with locking lid

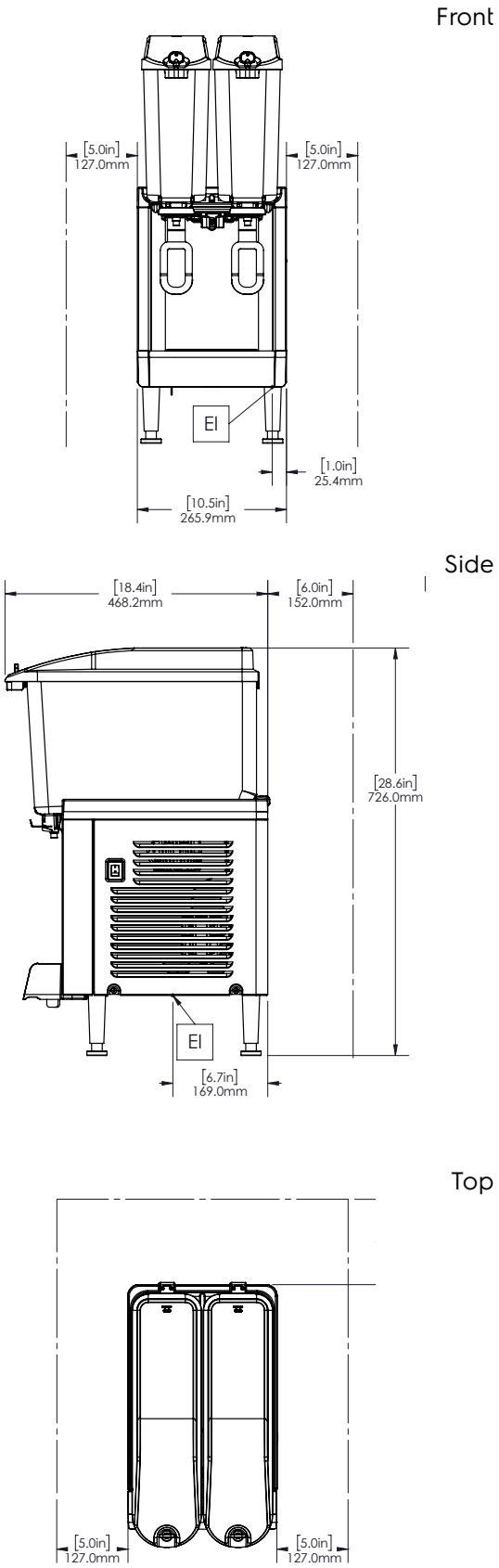

Electric

Supply voltage:	
CCCRKT (ECS2E22)	220-240 V/1N ph/50/60 Hz
Electrical power max.:	0.4 kW

Key Information:

External dimensions, Width:	267 mm
External dimensions, Depth:	451 mm
External dimensions, Height:	729 mm
Net weight:	20 kg
Shipping weight:	24 kg
Shipping height:	530 mm
Shipping width:	380 mm
Shipping depth:	480 mm

Sustainability

Refrigerant type:	R290
Refrigerant weight:	50 g

The company reserves the right to make modifications to the products without prior notice. All information correct at time of printing.